Unit Certificate

FGW TG8 EZE

TÜVRheinland® CERTIFIED

www.tuv.com
ID 1900000000

No.: 968/GI 2358.01/26 Grid Integration of Distributed Energy Resources

Certificate Holder	FOXESS CO., LTD No.939, Jinhai Third Road, New Airport Industry Area, Longwan District, Wenzhou Zhejiang China
Subject	PV Grid-tied Inverter **R75-G2, R80-G2, R100-G2, R110-G2, R125-G2, R136-G2**
Codes and Standards	VDE-AR-N 4110:2023 FGW TG 3:2023 Revision 26 FGW TG 4:2023 Revision 10 FGW TG 8:2019 Revision 9
Scope and result	The power generating units mentioned above meet the requirements of standards listed above. The conformity is declared by following documents: Validation Report No.: 968/GI 2358.00/26, dated 2026-07-31 Evaluation Report No.: 968/GI 2358.01/26, dated 2026-07-31 Test Report No.: CN25BGPR 001, dated 2026-01-25 The manufacturer has provided proof of certification of the quality management system of his production facility in accordance with ISO 9001.
Specific provisions	The deviations and conditions for conformity according to the evaluation report must be observed. The corresponding conditions and deviations are listed on following pages of the certificate.

Valid until 2031-07-30

The issue of this certificate is based upon an evaluation in accordance with the Certification Program CERT GI3 V5.0:2021-11 in its actual version, whose results are documented in Report No. 968/GI 2358.01/26 dated 2026-07-31. This certificate is specifically valid for the above mentioned system only. It becomes invalid, if any unapproved changes are implemented without prior assessment/approval by the certification body. Authenticity and validity of this certificate can be verified through the above indicated QR-code or at http://www.fs-products.com.

Köln, 2026-07-31

TÜV Rheinland Industrie Service GmbH
Bereich Automation
Funktionale Sicherheit
Am Grauen Stein, 51105 Köln
Certification Body Safety & Security for Automation & Grid

Armin Kerperin

www.fs-products.com
www.tuv.com

DAkkS Deutsche Akkreditierungsstelle D-ZE-11052-02-02

TÜVRheinland® Precisely Right.

10/222 12. 12 E A4 ® TÜV, TUEV and TUV are registered trademarks. Utilisation and application requires prior approval.

TÜV Rheinland Industrie Service GmbH, Am Grauen Stein, 51105 Köln / Germany
Tel.: +49 221 806-1790, Fax: +49 221 806-1539, E-Mail: industrie-service@de.tuv.com

Unit Certificate

Nr.: 968/GI 2358.01/23 Grid Integration of Distributed Energy Resources

Technical data of the PGU:

Type:	R75-G2	R80-G2	R100-G2	R110-G2	R125-G2	R136-G2
Max. apparent power of PGU:	82.5 kVA	88 kVA	110 kVA	121 kVA	137.5 kVA	138 kVA
Rated active power:	75 kW	80 kW	100 kW	110 kW	125 kW	136 kW
Max. active power (P_{600}):	82.35 kW	87.84 kW	109.77 kW	120.78 kW	137.25 kW	137.66 kW
Rated current:	108.7 A	115.9 A	144.9 A	159.4 A	181.1 A	197.1 A
Rated voltage:	380/400 V_{AC}					
Grid frequency:	50/60 Hz					
Software-Version:	V1.02					

Validated Simulation Model:

Reference name: R(75-136)-G2_VDE_V1_Encrypted.pfd

MD5 Checksum: 983a98c987b298b3b155dda4729eb900

Simulation platform: DIgSILENT PowerFactory 2024 SP4

10/222 12.12 E A4 ® TÜV, TUEV and TUV are registered trademarks. Utilisation and application requires prior approval.
TP-6036 Version: 5.0

Unit Certificate

Nr.: 968/GI 2358.01/23 Grid Integration of Distributed Energy Resources

The following deviations and restrictions apply:

☐ **None**

☒ **The following:**

Proof	Deviation / Restriction
Grid perturbations – switching operations	--
Grid perturbations – asymmetries	--
Grid perturbations – flicker	--
Grid perturbations – Harmonics, interharmonics and supraharmonics	--
Quasi-static operation	--
Pole angle and grid oscillations	--
Reactive power supply	▪ **Q(U) control:** 1) A voltage deadband cannot be set. If required, this has to be implemented on PGS level (e.g. via PGS controller). 2) An external interface for specifying the reference voltage U/Uc is not implemented. If required, this has to be implemented on PGS level (e.g. via PGS controller). ▪ **Q(P) control**: The PGU control only supports four reference points for Q(P) control. If more reference points are needed, the Q(P) control must be implemented on PGS level (e.g. by PGS controller). --
Method for reactive power supply	▪ A permanent active power reduction in favor of reactive power supply cannot be set. If required, this needs to be implemented on PGS level (e.g. via PGS-controller).
Active power output dependent on grid frequency	--

10/222 12.12 E A4 ® TÜV, TUEV and TUV are registered trademarks. Utilisation and application requires prior approval.

Unit Certificate

Nr.: 968/GI 2358.01/23 Grid Integration of Distributed Energy Resources

Proof	Deviation / Restriction
Active power – general and grid security management	▪ Separate interfaces for setpoint specifications regarding active power (e.g. grid operator, direct marketer) and the active power prioritization according chapter 8.1 of VDE-AR-N 4110 (e.g. in case of under-frequency) must be implemented at PGS level (e.g. by PGS-controller) and be evaluated as part of system certification.
Connecting – limit values for connection without prior protection tripping	--
Connecting – limit values for connection with prior protection tripping	--
Connecting – Active power gradient	--
FRT – dynamic grid support	--
FRT – Contribution to short-circuit current	--
Protection technology and settings – readability of the protection settings	▪ As the PGUs R75-G2 to R136-G2 do not contain a display, this has to be considered on project level. If required, an appropriate device to check the protection settings has to be provided on demand or should be stored on site.
Protection technology and settings – Test terminal block	▪ If required, this has to be installed separately.
Protection technology and settings – Setting range	--
Protection technology and settings – Accuracy	--
Protection technology and settings – Independence of protection functions	--
Protection technology and settings – auxiliary power supply	--
Protection technology and settings – section switch	--
Simulation model (validation)	▪ The validated simulation model of the PGUs specified shall be used in the certified version

10/222 12.12 E A4 ® TÜV, TUEV and TUV are registered trademarks. Utilisation and application requires prior approval.

Unit Certificate

Nr.: 968/GI 2358.01/23 Grid Integration of Distributed Energy Resources

Schematic overview of the PGU:

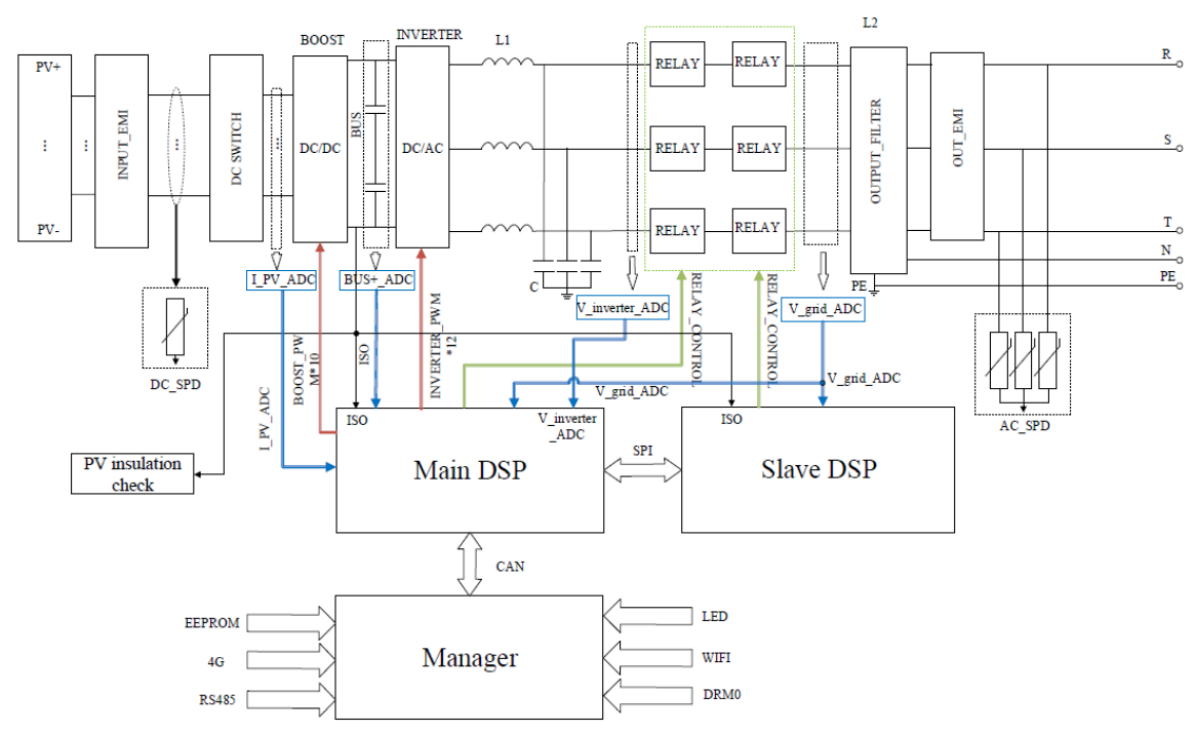

10/222 12.12 E A4 ® TÜV, TUEV and TUV are registered trademarks. Utilisation and application requires prior approval.

www.fs-products.com
www.tuv.com

TÜVRheinland®
Precisely Right.